DRY AGER® DX 7290 / DX 8290 PREMIUM

A technically fully equipped Dry Aging aging chamber in just a few simple steps. Especially practical if an existing room is to be retrofitted. DRY AGER aging units are supplied either as plug-and-play ceiling solutions for cold rooms or integrated as split units into existing cooling infrastructure. This enables maximum flexibility with full Dry Aging functionality.

DX AirReg®, HumiControl®, and the integrated UVC sterilization system ensure an **optimal microclimate for dry aging meat, sausages, ham, cheese, or fish**. All other foods or products that require a specific climate can also be professionally stored using this technology.

Self-contained R290 refrigeration system maintains perfect microclimate with electronic temperature (0 – 25°C) and humidity control (60 – 90%), minimizing product loss—**without the need for a water connection or drain**. The standard warranty is 3 years compressor and 2 years parts and labor.

№1 BRAND WORLDWIDE** Quality from Germany

** For professional dry aging solutions

Standard features

Temperature & Humidity
- HumiControl® – steady humidity electronically controlled from 60 % to 90 % without the requirement for water connection or drain
- Electronically controlled temperature from 0 °C to 25 °C
- Superior aging with minimal weight loss
- Automatic hot gas defrost system with built-in condensate evaporation

Hygiene
- UVC sterilisation system, without UV exposure of the product
- DX AirReg® – for an optimal airflow in terms of air distribution and speed

Safety
- Visual & audible alarm
- Equipped with a **double safety shutdown system to protect key components,** including the cooling compressor, in the event of an overload
- Hermetically sealed refrigeration circuit

Modularity & Installation
- Compact plug-and-play ceiling unit with integrated compressor, condenser, evaporator, and dry aging technology
- Installation on top of maturing chamber ceiling with on-site ceiling cutout

Standard warranty
- 2 years parts and labor

Model name	**DX 7290**	**DX 8290**
Art. No.	**DX7290**	**DX8290**
Cooling capacity at 0 °C room and 32 °C ambient	1450 W	1900 W
Estimated maximum chamber volume*	up to 16 m³	up to 24 m³
Heat output	1900 W	2500 W
Cold room temperature	0 °C to +25 °C	0 °C to +25 °C
Humidity control range	60 – 90 %	60 – 90 %
Permissible ambient temperature	+10 °C to +38 °C	+10 °C to +38 °C
Dimension (W x D x H)	945 × 1170 × 535 mm	945 × 1170 × 535 mm
Dimension ceiling cutout (W x D)	450 × 740 mm	450 × 740 mm
Total weight	120 kg	127 kg
Voltage, frequency	1 ~ 230 V / 50 Hz	1 ~ 230 V / 50 Hz
Fuse protection (C characteristic)	16 A	16 A
Sound pressure	80 db(A)	80 db(A)
Compressor type	Reciprocating compressor (fully hermetic)	Reciprocating compressor (fully hermetic)
Refrigerant type: R290	140 g	127 g
Expansion organ	thermostatic expansion valve	thermostatic expansion valve
Operation	Via control panel 5 m	Via control panel 5 m

DRY AGER®
DX 7290 / DX 8290 PREMIUM

The route to your maturing chamber

Consider the following **minimum requirements** when planning your maturing chamber

- Fully insulated floor
- Do not use heated glass.
- Recommended insulation values for walls, floor and ceiling: 0.25 W/m² x K
- Recommended glass insulation values: 1 W/m² x K
- Max. 100 W LED-lighting
- As few door openings as possible

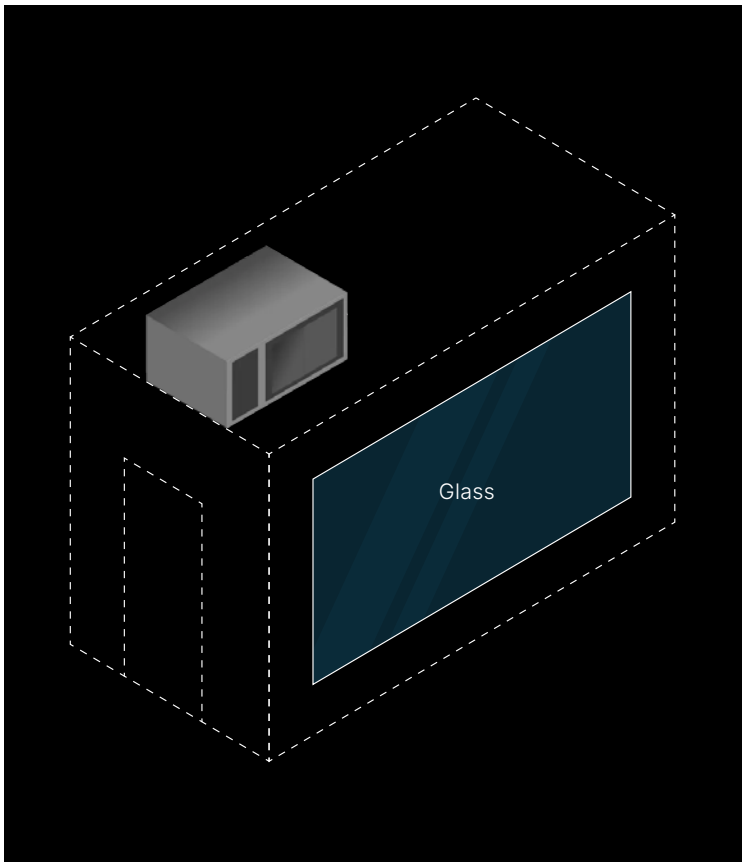

Examples for possible use-cases:

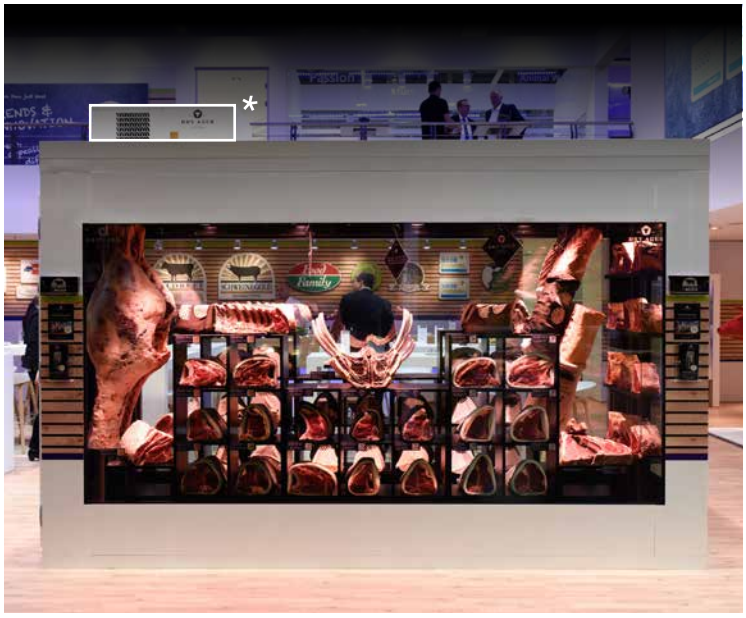

**The data sheet refers exclusively to the device DX 7290 / DX 8290 Premium*

DRY AGER®
DX 7290 / DX 8290 PREMIUM

Technical illustrations

Distance requirements – side view

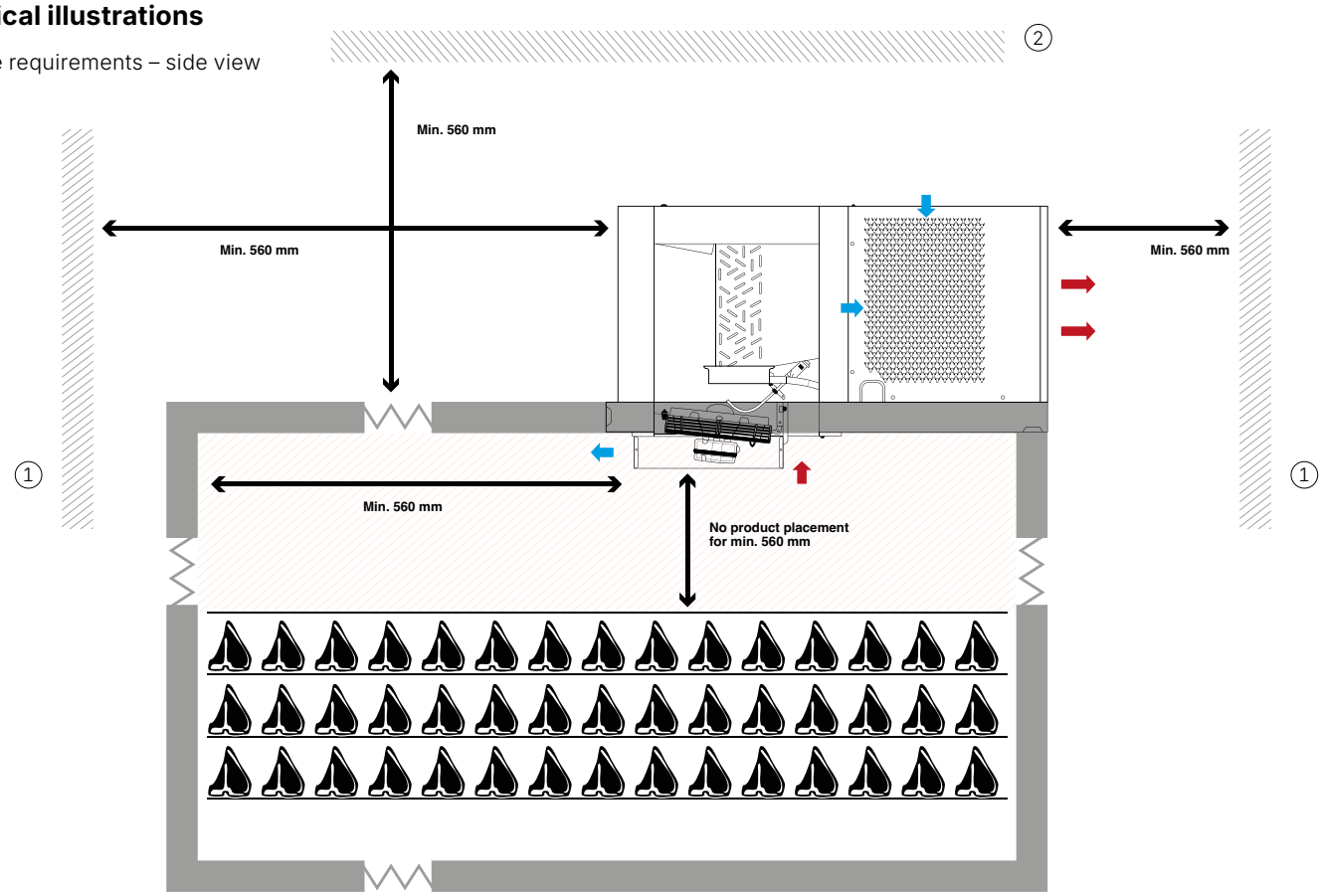

IMPORTANT
Sufficient heat dissipation must be ensured.
(See heat output technical specifications)

Easy to maintain,
service and to clean.

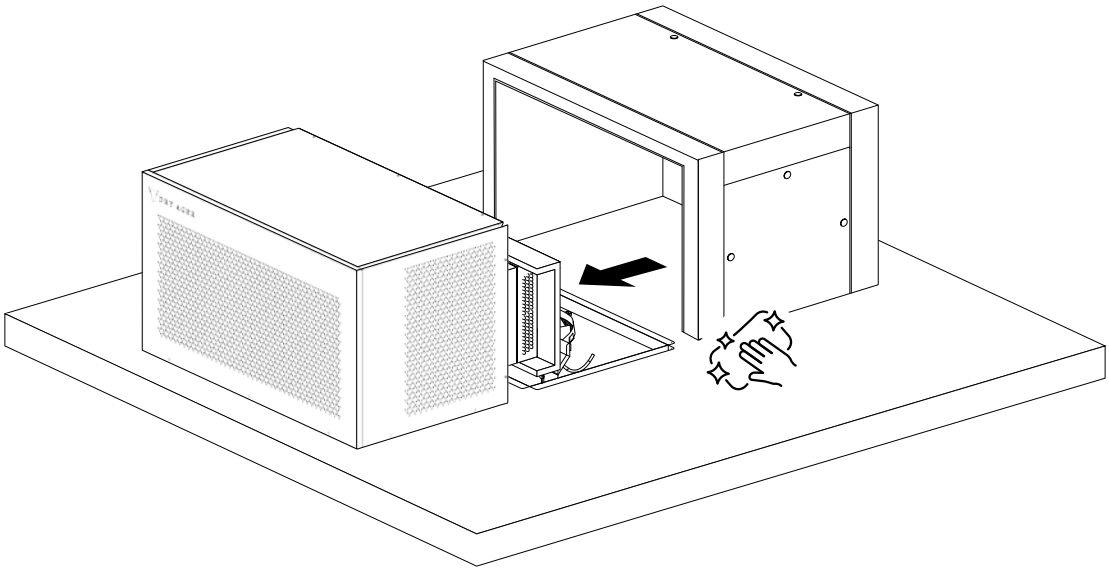

1 Walls of the room, where chamber is located
2 Ceiling of room, where chamber is located
Cool air direction
Warm air direction

DRY AGER®
DX 7290 / DX 8290 PREMIUM

Dimensional Drawings

Front view (mm)

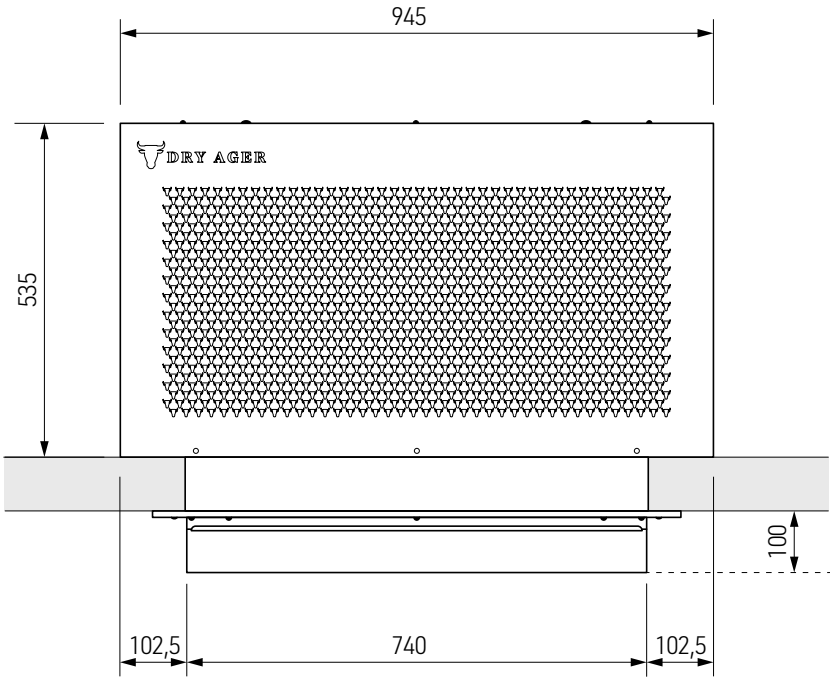

Side view (mm)

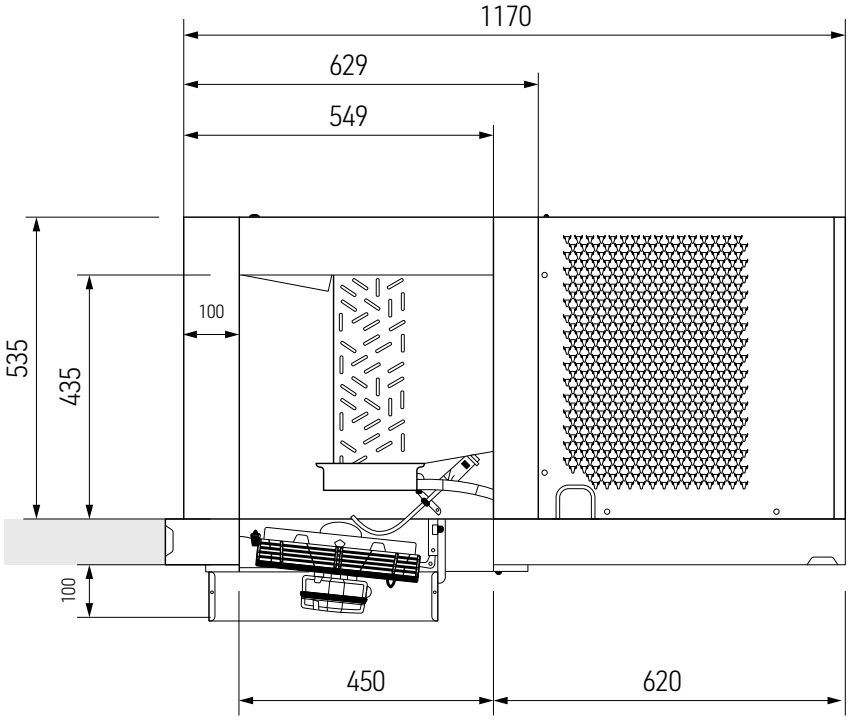

DRY AGER®
DX 7290 / DX 8290 PREMIUM

Ceiling Cutout Drawing

View from inside (mm)

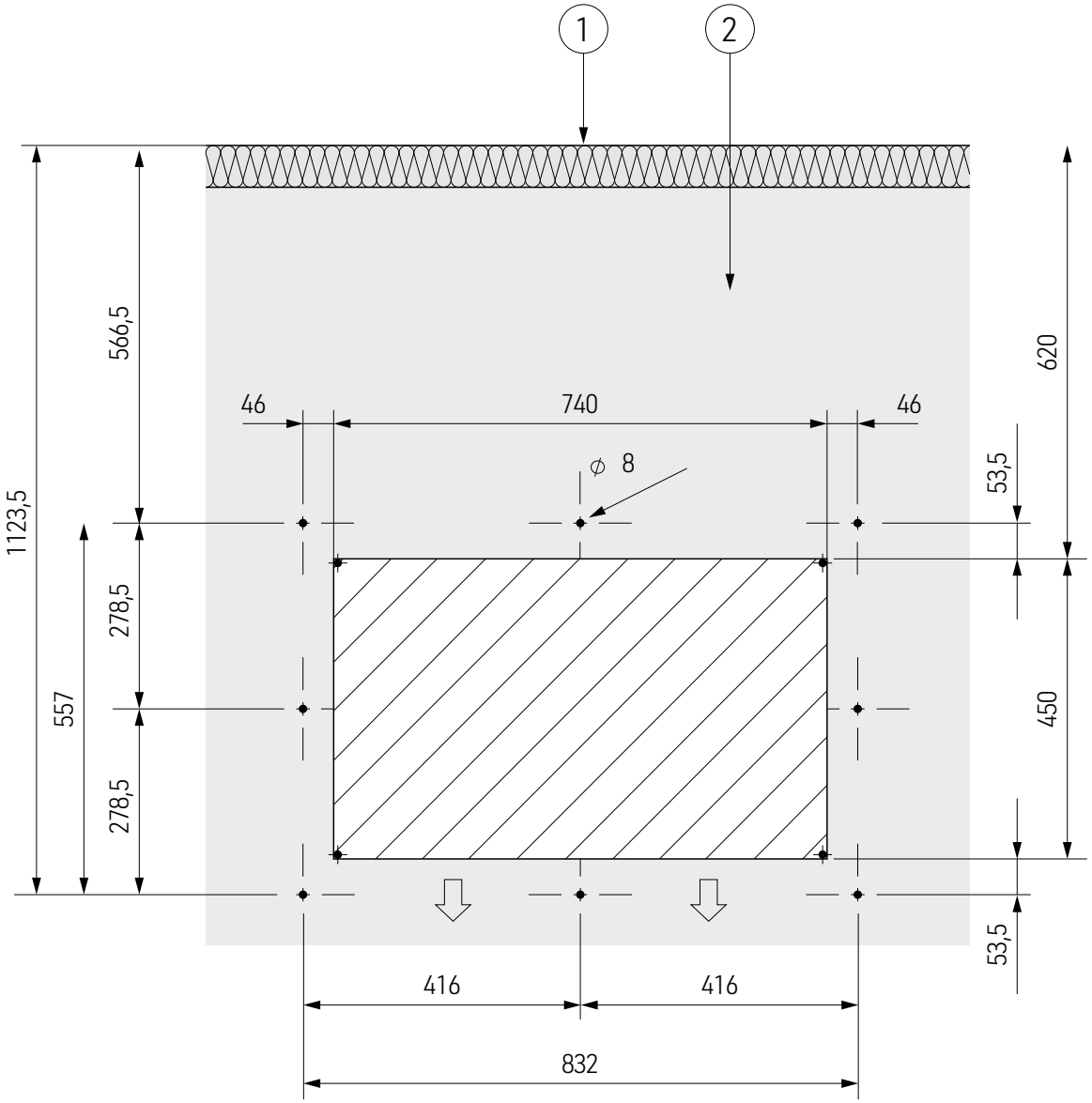

① Chamber wall
② Machine part
Air direction

Cutout

Bohrloch

Optional Accessories for the High production unit

Accessories

DX4044 **S-Hook**
Made of stainless steel, Size: 160 × 8 mm
load capacity up to 100 kg

DX4055 **Swivel Hook**
Made of stainless steel, Size: 180 × 8 mm
load capacity up to 100 kg

Z33145 **DRY AGER® Special Cleaner**
Cleaning concentrate in a 500 ml spray bottle,
for removing stubborn dirt and for disinfection.

Maintenance

DX0108 **UVC Replacement Bulb, compatible with Production Unit**
replacement bulb-system for annual maintenance of UVC sterilization system.